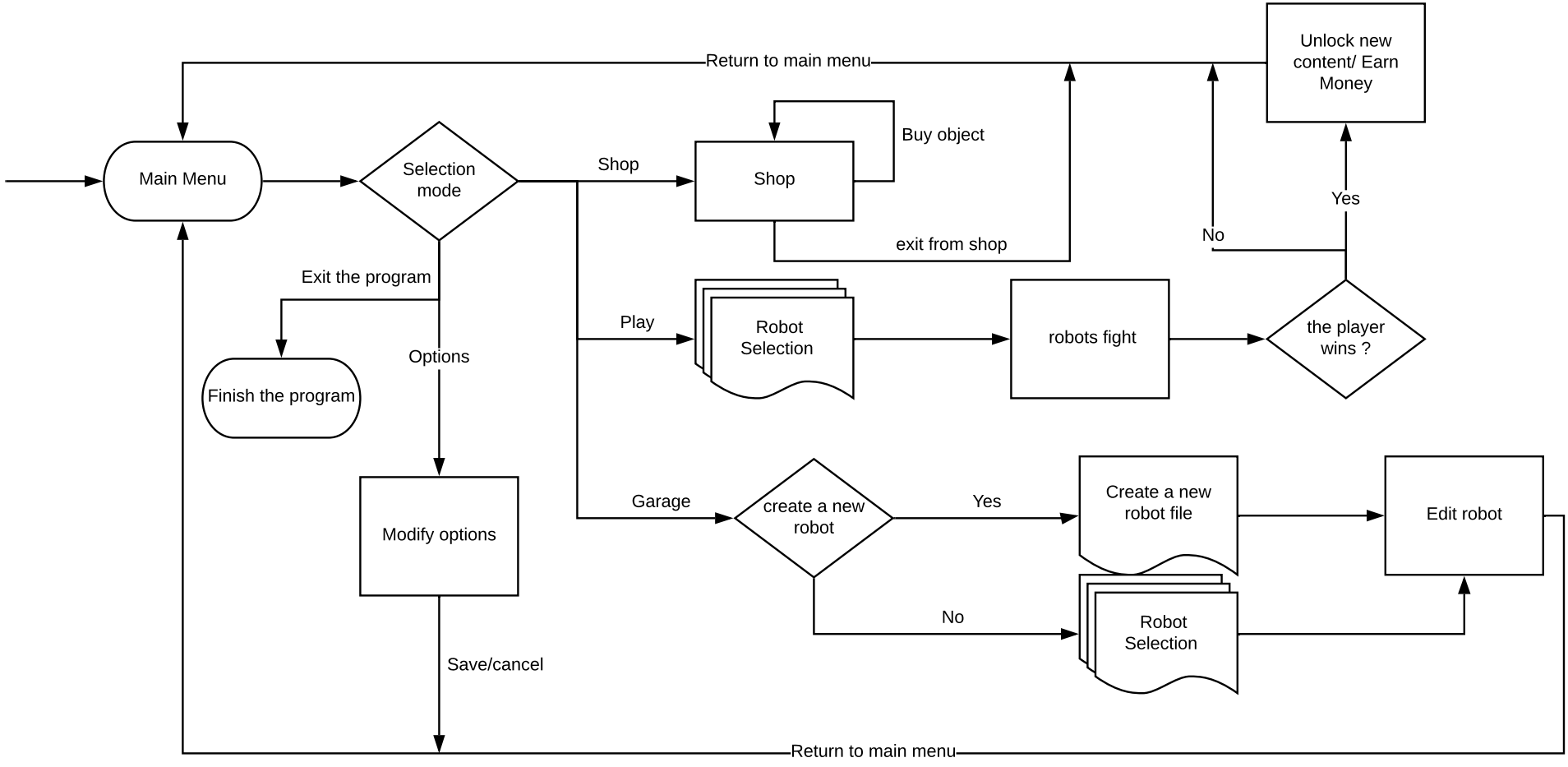
Return to main menu
Unlock new content/ Earn Money
Main Menu
Selection mode
Shop
Shop
Buy object
exit from shop
Yes
No
Exit the program
Play
Robot Selection
robots fight
the player wins ?
Finish the program
Options
Modify options
Garage
create a new robot
Yes
Create a new robot file
Edit robot
No
Robot Selection
Save/cancel
Return to main menu